FIRST ANGLE PROJECTION

(ALL DIMENSIOMS ARE IN mm)

DRG. NO. 3WEEOT01149

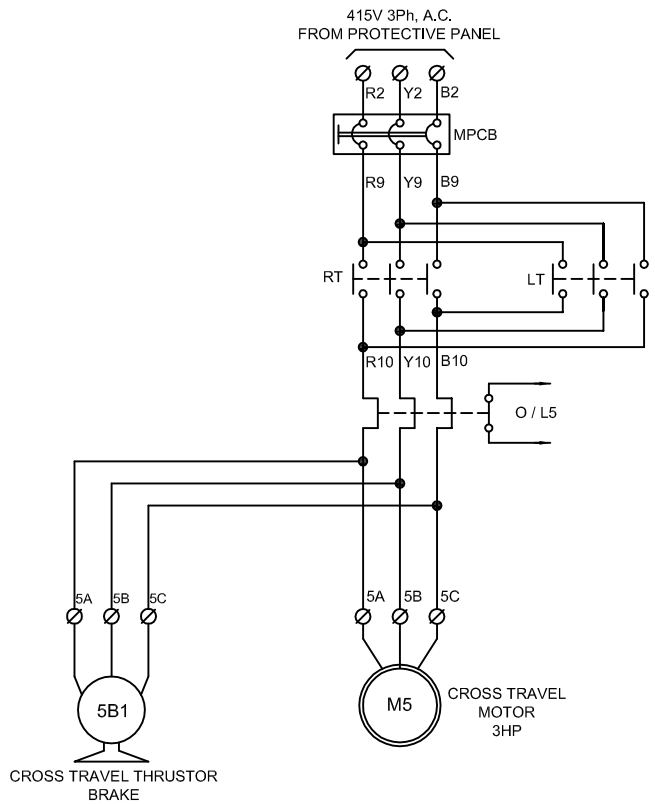

THE INFORMATION ON THIS DOCUMENT IS THE PROPERTY OF BHARAT HEAVY ELECTRICALS LIMITED.
IT MUST NOT BE USED DIRECTLY OR INDIRECTLY IN ANY
WAY DETRIMENTAL TO THE INTEREST OF THE COMPANY.

REF. DRG. NO.

SIGN. & DATE

INVENTORY NO.

ADDITIONAL INFORMATION

STATUS OF DRAWING

DISTRIBUTION OF PRINTS

TYPE OF PRODUCT
OR
NAME OF CUSTOMER/PROJECT

बीएचईएल
BHEL

BHARAT HEAVY ELECTRICALS LTD.
BHOPAL

	NAME	SIGN	DATE	NO. OF VAR.
DRN.	R.PARTE		22.03.14	
CHD.	ARUN KUMAR			
APPD.	H.L.BHARANI		25.03.14	00

REV.	DATE		
01	21.07.15	ALTERED	R.BARASKAR
		CHECKED	ARUN KUMAR
		APPROVED	

ZONE 1.–REMOVE THE INDICATING CIRCUIT

DEPT.	UNTOL. DIMS. GR.	SCALE	WEIGHT (K.G.)	REF. TO ASSY. DRG.	ITEM NO.	NO. OF ITEM
WEX						
CODE 375						

TITLE

POWER CIRCUIT DIAGRAM OF CROSS TRAVEL PANEL
E.O.T.CRANE 5TON & 10TON SINGLE HOIST CRANE

DRAWING NO. **3WEEOT01149** REV. 01

SHT. NO. 07 NO. OF SHT. 08

SIZE A3